GRADE 9 - CHAPTER 2

dynamic electricity

Made by: Cathlyn, Angela, Wulan, Jonathan

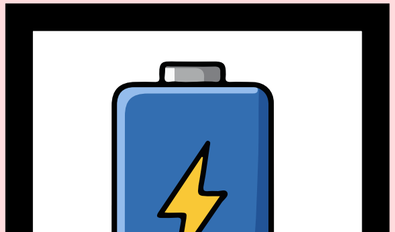
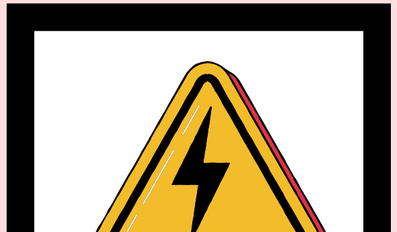
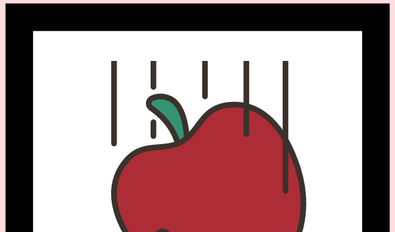

ELECTRIC POTENTIAL & ELECTRICAL POTENTIAL DIFFERENCE

The main difference is that electric potential is measured at one point, while potential difference compares two points. Electric current flows from higher potential to lower potential, and this flow is usually created by a battery or cell.

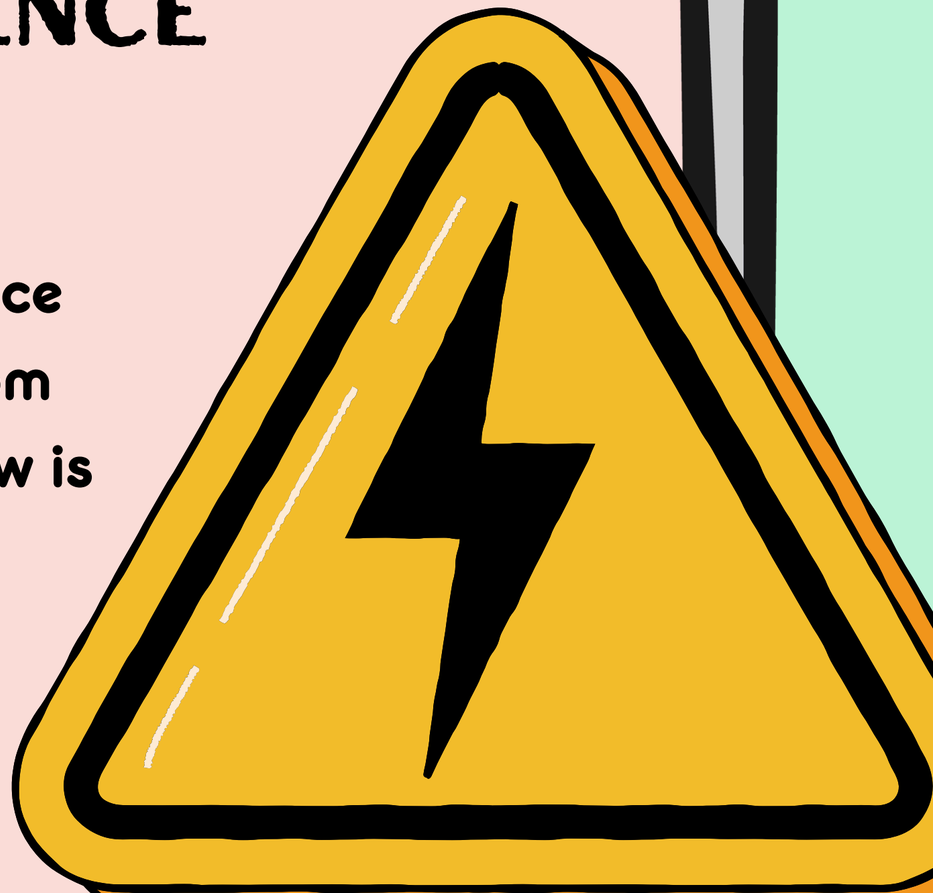

ELECTRIC CURRENT

Electric current is the flow of electrons through a conductor. For electric current to flow, a closed circuit and a voltage source (such as a battery) are needed. Voltage pushes electrons to move in one direction.

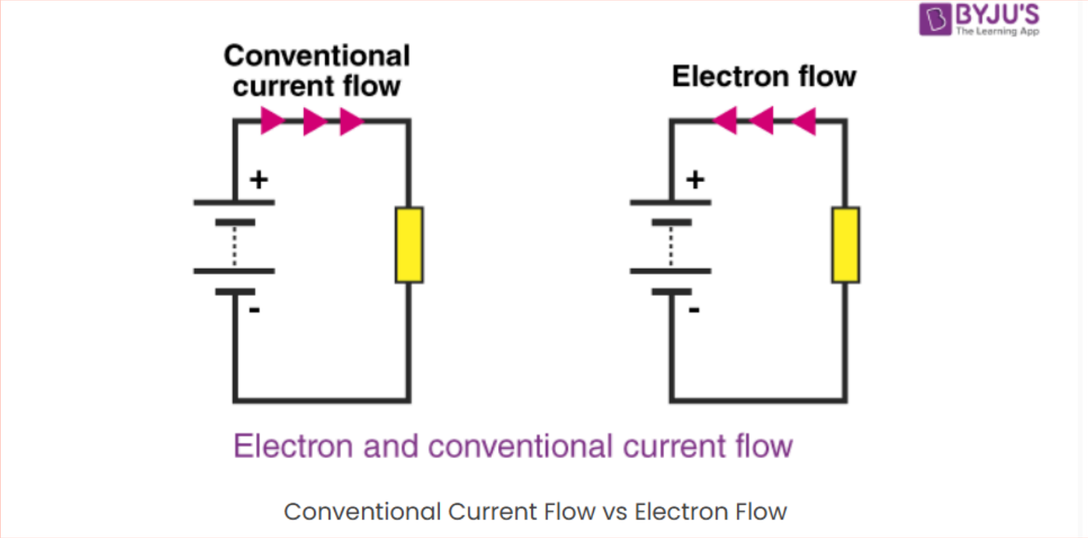

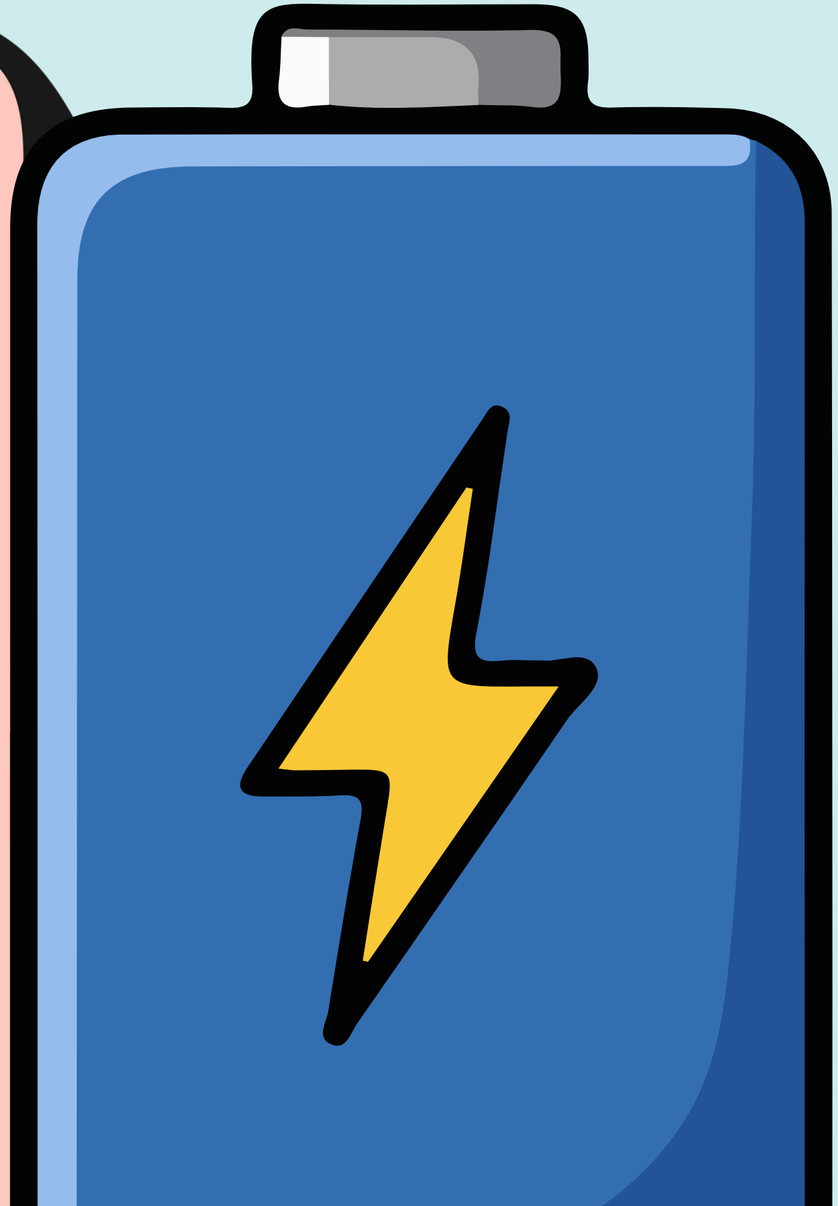

OHM'S LAW

electric current (I) flowing in a wire is directly proportional to the voltage (V) applied ($I \propto V$). This relationship is called Ohm's Law, where voltage causes current to flow.

Formula:

$$I = V / R$$

KIRCHHOFF'S LAW

The total current entering a junction (node) is equal to the total current leaving it. This follows the conservation of charge.

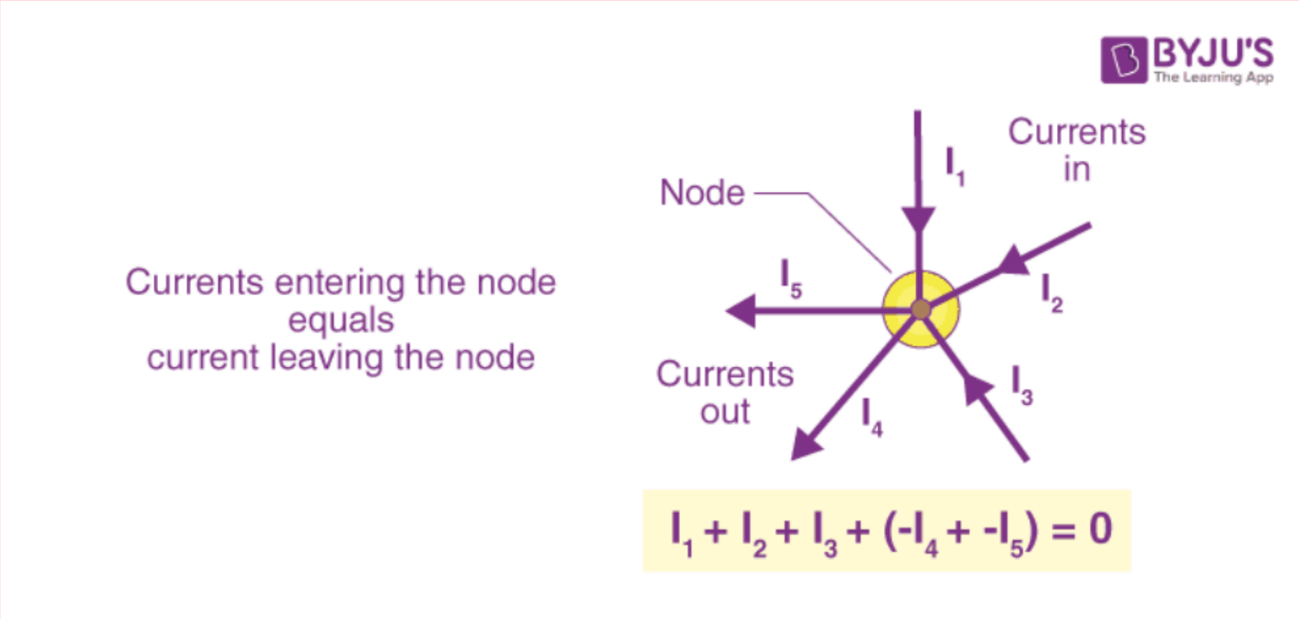

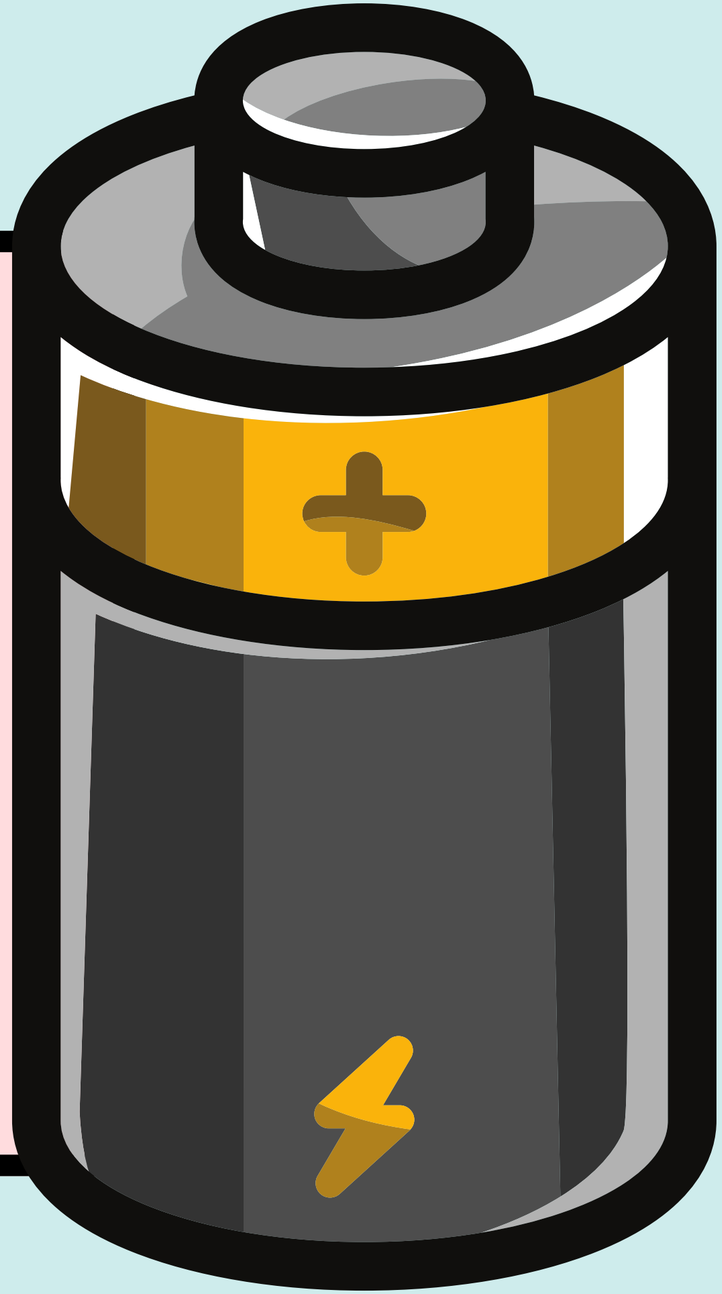

SERIES AND PARALLEL CIRCUIT

- A series circuit is a circuit where the same current flows through all components because the current has only one path.
- A parallel circuit is a circuit where electric current has multiple paths to flow. In this circuit, each component has the same voltage across it.

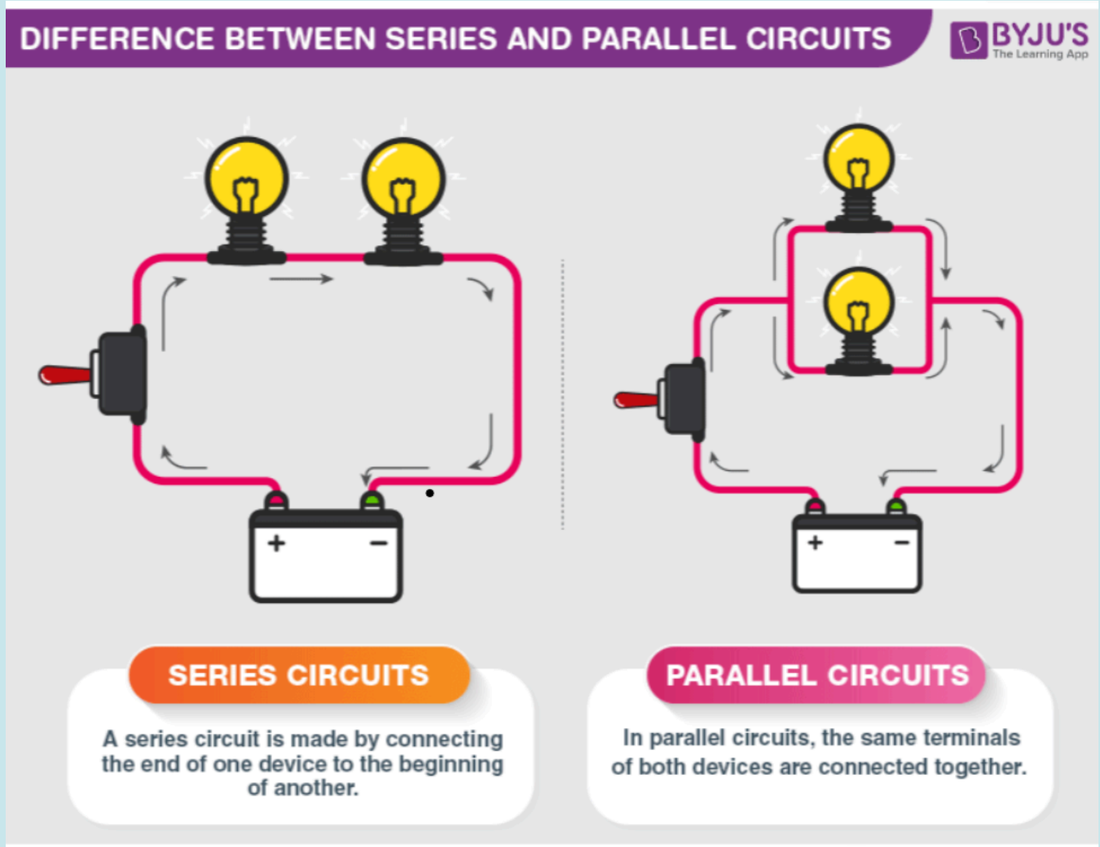

EMF

Electromotive Force (EMF) is the electric potential produced by a battery or generator that pushes electric charges through a circuit. It is the work done per unit charge to move electricity.

The formula for EMF is $\varepsilon = V + Ir$, where V is the voltage, I is the current, and r is the internal resistance.